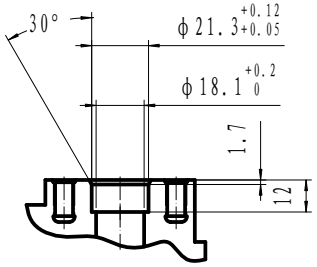

断面 A-A

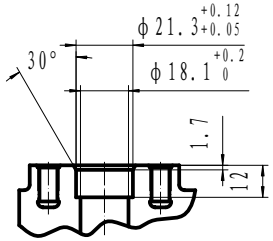

断面 B-B

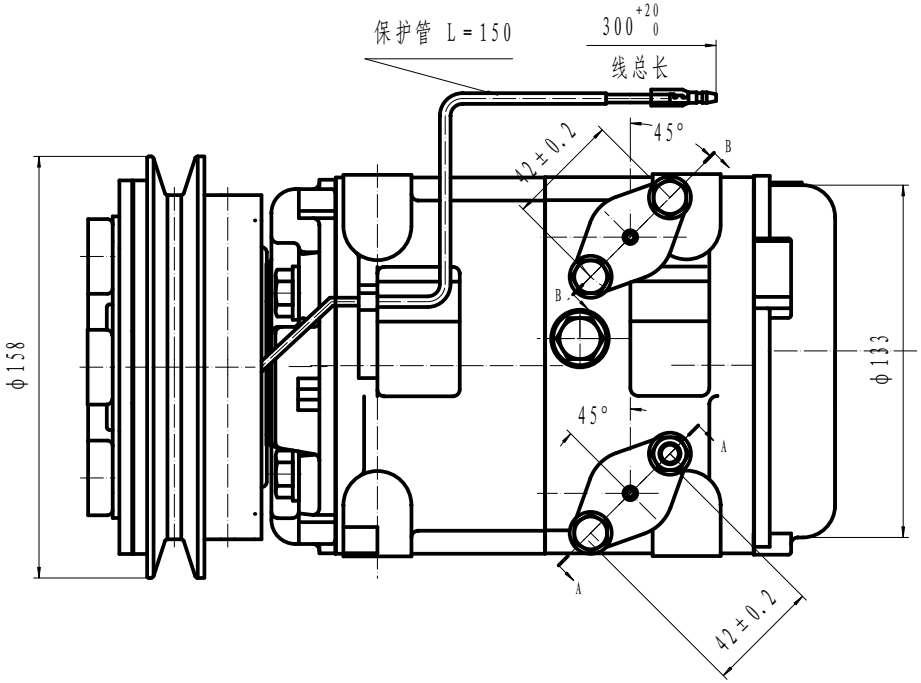

COMPRESSOR ASSY:
1. OPERATING SPEED: 700~5000r/min
(MAXIMUM SPEED6000r/min)
2. DIRECTION OF ROTATION: CLOCK WISE
3. WEIGHT: 15.5Kg
4. REFRIGERANT: HFC-134a
5. LUBRICANT: PAG 500^{+10}cm^2
6. WEIGHT: 9.5Kg(WITHOUT OIL)

COMPRESSOR:
1. MODEL: HCS-33
2. CYLINDER: 10-φ37X30.7
3. DISPLACEMENT: 330cm^2/rev
4. LEAKAGE TEST: ADDITIONAL TABLE
5. GAS LEAK:30g/y

MAGNETIC CLUTCH:
1. RATED VOLTAGE: DC 12V
2. SHAPE OF THE BELT: 1B
3. STATIC TORSION: ABOVE 78N.m(8Kgf.m)
4. WATTAGE: 48W(DC24V2.0A) (25° C)
MINIMUM ATTRACTING VOLTAGE: BELOW 9V (90° C)
5. THERMAL RESISTANCE: AT 100° C,DC30V ELECTRIFY SUCCESSIVELY
6. WEIGHT: 5.5Kg

NOTE FOR COMPRESSOR INSTALLATION:
1. INCLINATION AT INSTALLATION SHOULD BE < 15° IN LATERAL DIRECTION;< 5° FOR FRONT LIFTING;AND NO LIFTING FOR BACKSIDE;
2. DURING TRANSPORTATION,COMPRESSOR SHOULD NOT BE INCLINED BY 45° IN BOTH LATERAL AND LONGITUDINAL DIRECTIONS;BEFORE INSTALLATION,COMPRESSOR SHOULD BE PLACED HORIZONTALLY FOR MORE THAN 10 MINUTES;
3. REQUIREMENTS FOR THE BOLT TORSIONS:
FIXED BRACKET BOLT: 36-50N.M
FIXED LINKER BOLT : 20-24N.M

ITEM	UNITAGE	HIGH PRESSURE SIDE	LOW PRESSURE SIDE
AIRPROOF PRESSURE	MPa	2.9	1.5
	(Kgf/cm^{2}G)	(30)	(15)
RESISTANT PRESSURE	MPa	4.4	2.2
	(Kgf/cm^{2}G)	(45)	(22.5)

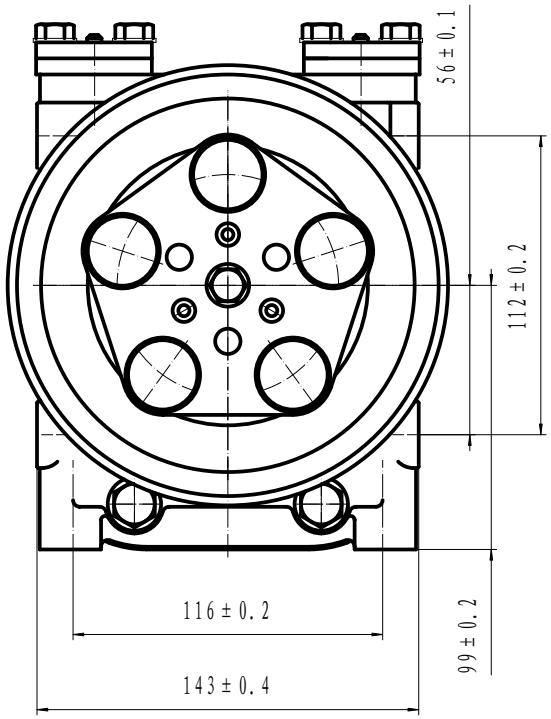

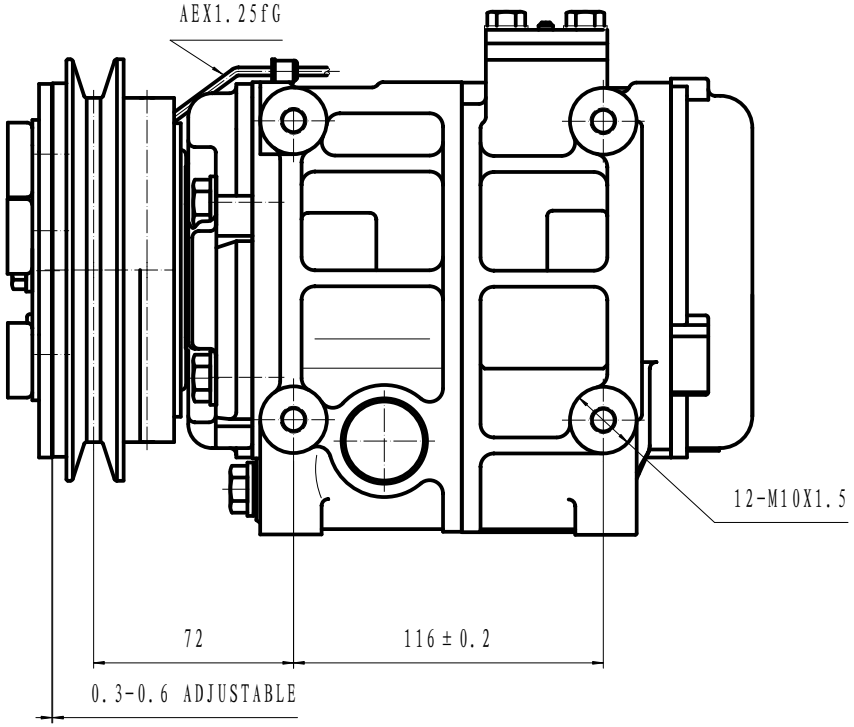

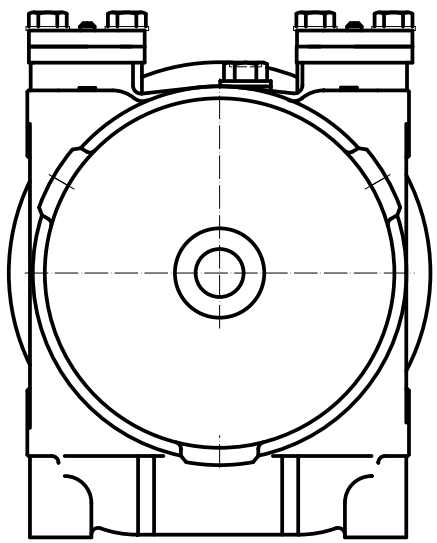

标记	处数	分区	更改文件号	签名	年.月.日	HCS-33	HZL
设计	01	7	标准化	舒承胜	09-02-04	阶段标记 / 重量 / 比例 1:1	COMP ASSEMBLY
审核						共 张 第 张	305160-1100
工艺			批准				