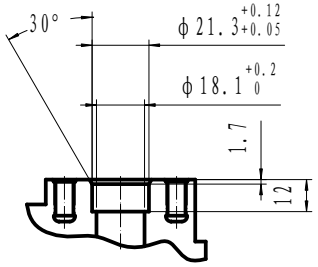

断面 A-A

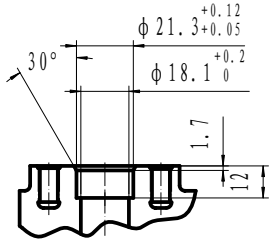

断面 B-B

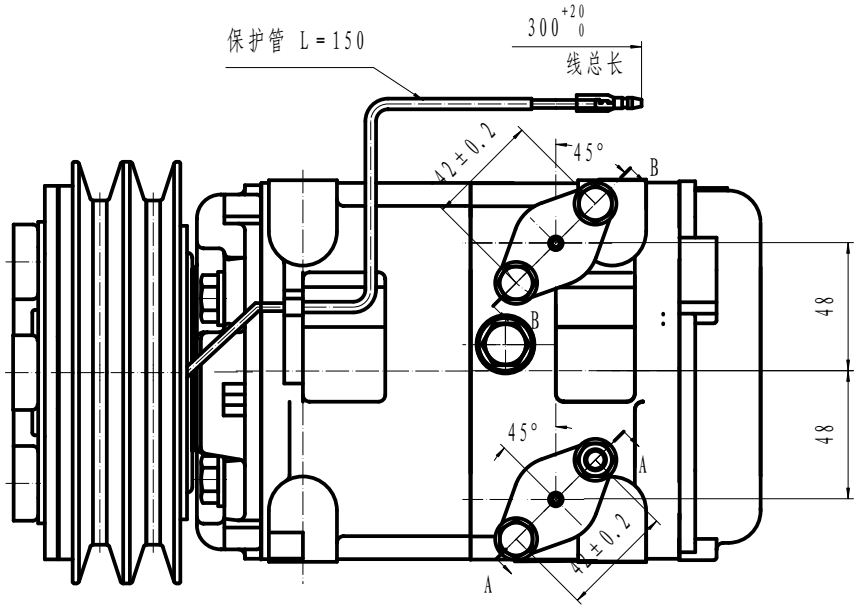

COMPRESSOR ASSY:
1、OPERATING SPEED: 700~5000r/min
(MAXIMUM SPEED 6000r/min)
2、DIRECTION OF ROTATION: CLOCK WISE
3、WEIGHT: 15.5Kg
4、REFRIGERANT: HFC-134a
5、LUBRICANT: PAG 500^{cst}cm^2
6、WEIGHT: 9.5Kg(WITHOUT OIL)

COMPRESSOR:
1、WODEL: HCS-33
2、CYLIWDER: 10-φ37X30.7
3、DISPLACEMENT: 330cm^3/rev
4、LEAKAGE TEST: ODDITIONAL TABLE
5、GAS LEAK: 30g/y

MAGNETIC CLUTCH:
1、RATED VOLAGE: DC 12V
2、SHAPE OF THE BELT: 2A
3、STATIC TORSION: ABOVE 78N.m(8kgf.m)
4、WATTAGE: 48W(DC24V2.0A) (25° C)
MINIMUM ATTRACTING VOLTAGE:VOLTAGE: BELOW21V(90° C)
5、THERMAL RESISTANCE: AT 100° C DC30VELECTRIFY SUCCESSIVELY
6、WEIGHT: 5.5Kg

NOTE FOR COMPRESSOR INSTALLATION:
1、INCLINATION AT INSTALLATION SHOULD BE < 15° IN LATERAL DIRECTION; < 5° FOR FRONT LIFTING; AND NO LIFTING FOR BACDSIDE;
2、DURING TRANSPORTATION, COMPRESSOR SHOULD NOT BE INCLINED BY 45° IN BOTH LATERAL AND LONGITUDINAL DIRECTIONS; BEFORE INSTALLATION, COMPRESSOR SHOULD BE PLACED HORIZONTALLY FOR MORE THAN 10 MINUTES;
3、REQUIREMENTS FOR THE BOLT TORSIONS:
FIXED BRACKET BOLT: 36-50N.M
FIXED LINKER BOLT: 20-24N.M

ITEM	UNIT	HIGH PRESSURE SIDE	LOW PRESSURE SIDE
AIRPROOF PRESSURE	MPa	2.9	1.5
	(Kgf/cm^{2}G)	(30)	(15)
RESISTANT PRESSURE	MPa	4.4	2.2
	(Kgf/cm^{2}G)	(45)	(22.5)

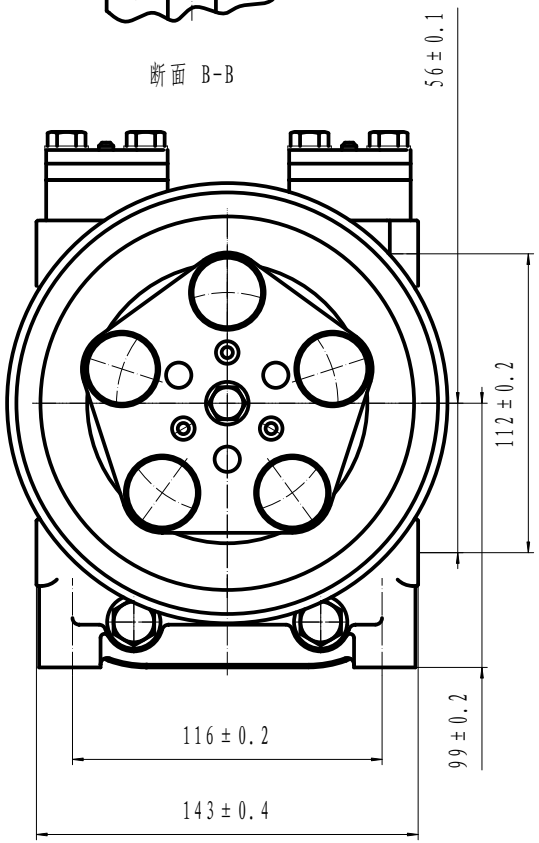

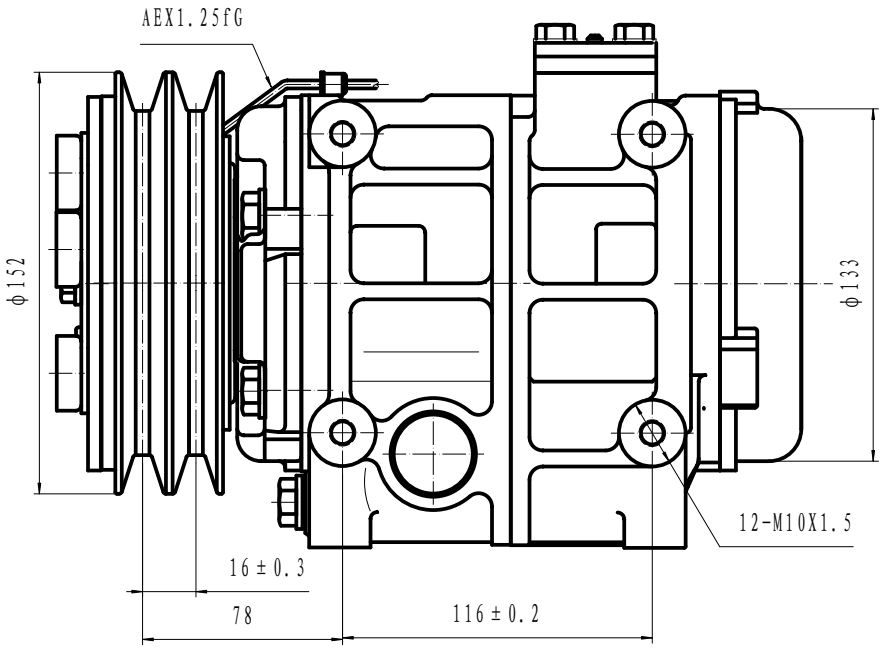

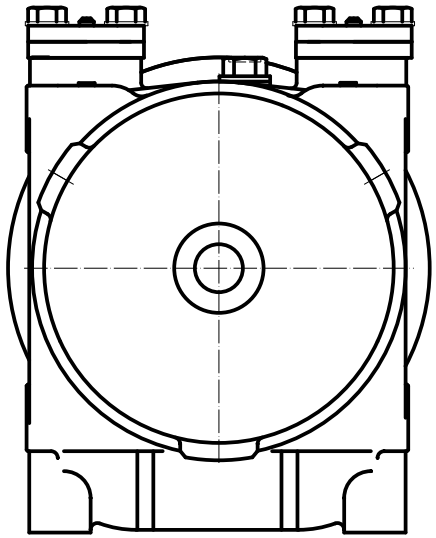

标记	处数	分区	更改文件号	签名	年、月、日	HCS-33	重庆长安汽车制冷系统有限公司
设计	敬仕强	2006.9.15	标准化	舒承胜	09-02-07	阶段标记 / 重量 / 比例	总装图
审核						1:1	305160-6110
工艺			批准			共 张 第 张	