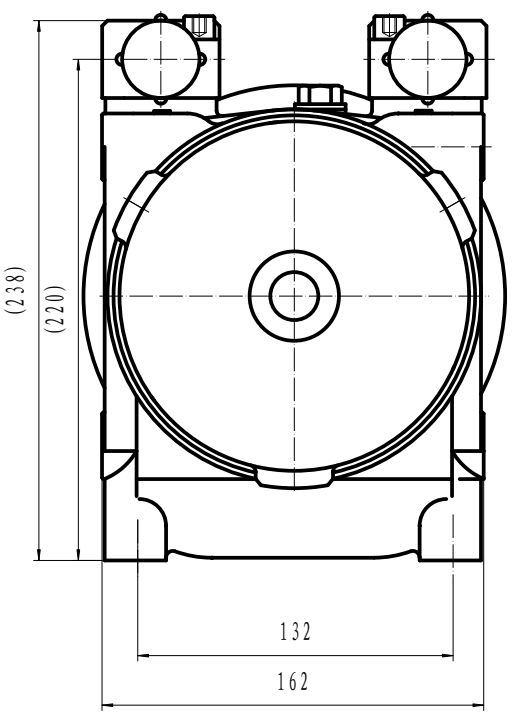

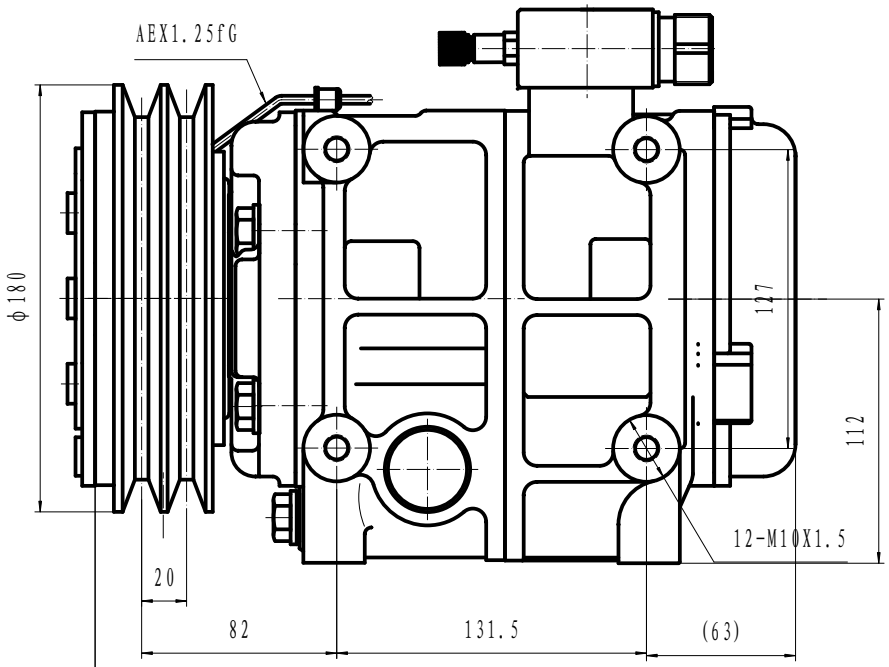

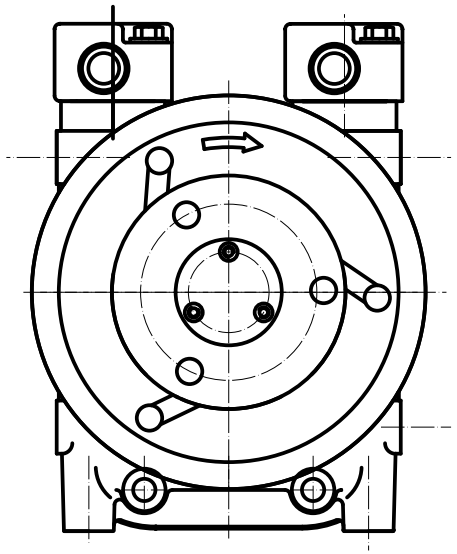

0.4-0.8 ADJUSTABLE

PROTECT CORD LENGTH 150

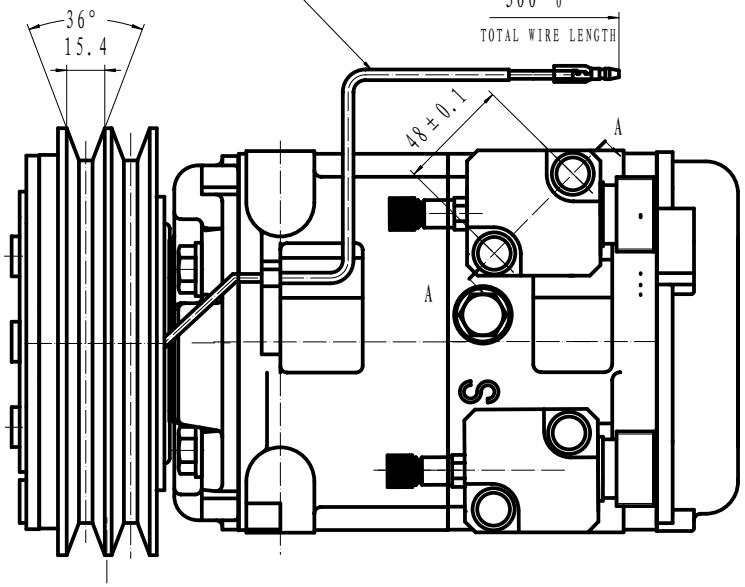

D

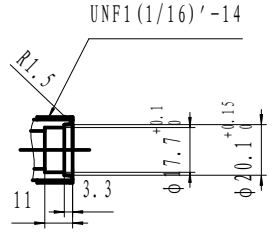

S

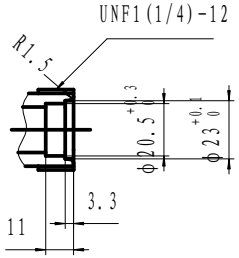

COMPRESSOR ASSY:
1、OPERATING SPEED: 800-4000r/min
(MAXIMUM SPEED 5000r/min)
2、DIRECTION OF ROTATION: CLOCK WISE
3、WEIGHT: 21.5Kg
4、REFRIGERANT: HFC-134a
5、LUBRICANT: PAG 800^{cSt} cm^2

COMPRESSOR:
1、MODEL: HCS-48
2、CTLINDER: 10-φ42X34.7
3、DISPLACEMENT: 480cm^3/rev
4、LEAKAGE TEST: ODDITIONAL TABLE
5、GAS LEAK: 30g/y

MAGNETIC CLUTCH:
1、RATED VOLTAGE: DC 24V
2、SHAPE OF THE BELT: 2B
3、STATIC TORSION: ABOVE 120N.m(12Kgf.m)
4、WATTAGE: 48W(DC24V2.0A)(25°C)
MINIMUM ATTRACTING VOLTAGE:
BELOW 21V(90°C)
5、THERMAL RESISTANCE: AT 100°C,DC30V ELECTRIFY SUCCESSIVELY
6、WEIGHT: 6.5Kg

D: 2.5MPa S:0.3MPa

NOTE FOR COMPRESSOR INSTALLATION:
1、INCLINATION AT INSTALLATION SHOULD BE < 15° IN LATERAL DIRECTION;< 5° FOR FRONT LIFTING; AND NO LIFTING FOR BACKSIDE;
2、DURING TRANSPORTATION,COMPRESSOR SHOULD NOT BE INCLINED BY 45° IN BOTH LATERAL AND LONGITUDINAL DIRECTIONS;BEFORE INSTALLATION,COMPRESSOR SHOULD BE PLACED HORIZONTALLY FOR MORE THAN 10 MINUTES;
3、REQUIREMENTS FOR THE BOLT TORSIONS:
FIXED BRACKET BOLT: 36-50N.M
FIXED LINKER BOLT: 20-24N.M

ITEN	UNIT	HIGH PRESSURE SIDE	LOW PRESSURE SIDE
RESISTANT PRESSURE	MPa	4.4	2.2
	(Kgf/cm^{2}G)	(45)	(22.5)

标记	处数	分区	更改文件号	签名	年、月、日	HCS-48	HZL
设计	舒承胜	2008.12.1	标准化	舒承胜	09-02-04	阶段标记 重量 比例	COMP ASSEMBLY
审核						1:1	305160-1900
工艺			批准			共 张 第 张	